REDUCER

费利克斯

精密蜗轮蜗杆减速机

High precision worm gearbox

回转间隙可达 1 弧分/ Backlash BEST to 1 arcminute

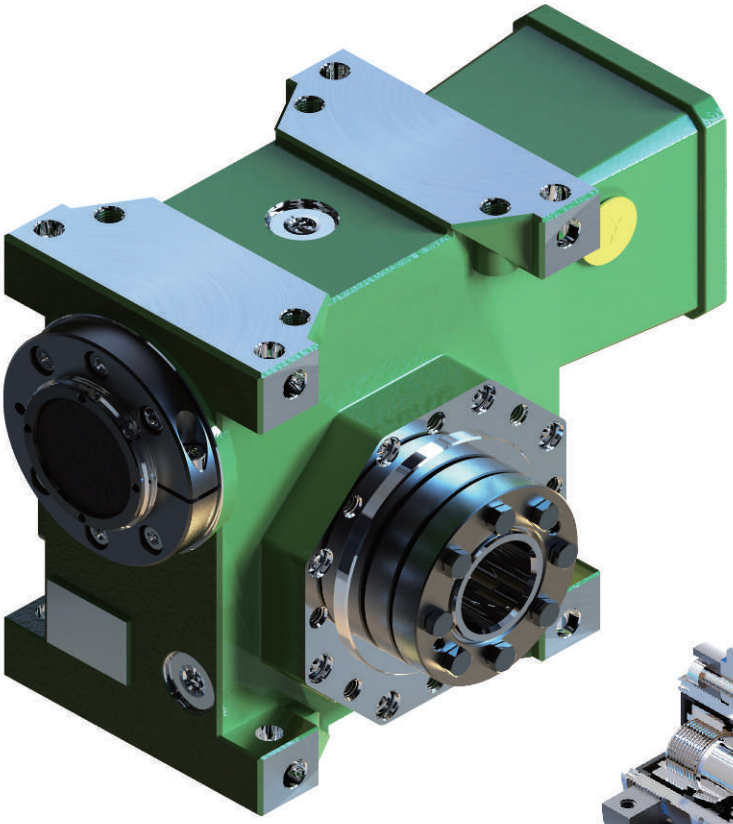

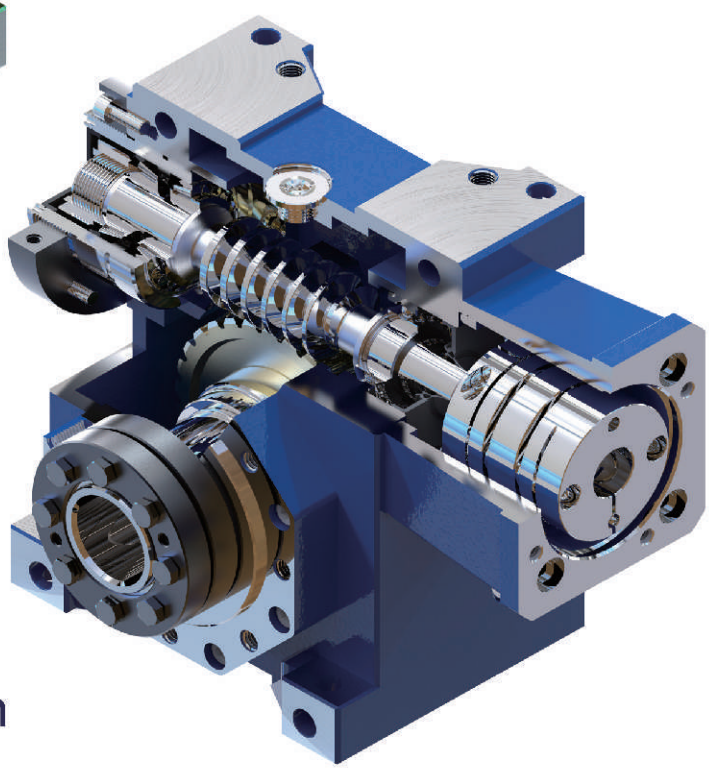

高精度	High precision
高刚性	High stiffness
高自锁性	Self-Lock
低背隙	Low backlash
低噪音	Low noisy

精密蜗轮蜗杆减速机

蜗轮蜗杆减速机是精密行星减速机的理想替代产品，设备厂商可以大幅减少使用精密行星齿轮减速机的应用成本

The new series high precision worm gearbox is an ideal substitute for precision planetary gearbox,the equipment manufacturer can substantially reduce the cost of using precision planetary gearbox

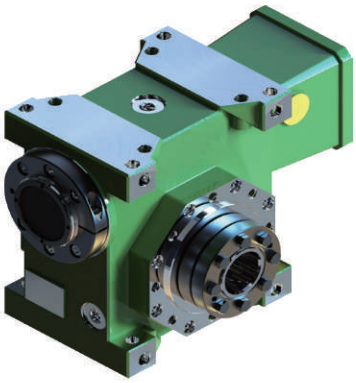

空心轴带锁紧盘输出，精度高，容易整合
Hollow shaft with shrink disc
high precision and easy integration

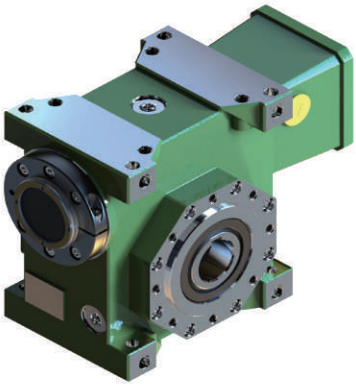

空心轴带键槽输出，安装方便
Output with keyway, convenient installation

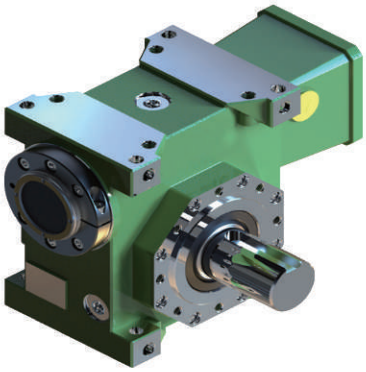

实心轴输出（单轴/双轴），刚性好
Solid shaft output (single shaft/double shaft)
high stiffness, traditional solution

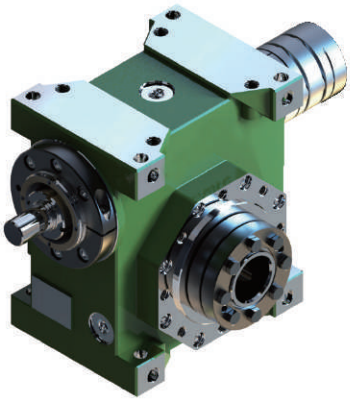

双输入轴(一个由电机驱动, 一个可以手动)
Double input shaft is available
One for servo motor/one for manual drive

设计者的理想解决方案是旋转90° 来安装伺服电机驱动系统

The designer's ideal solution is to rotate 90 degrees to install the servo motor drive systems

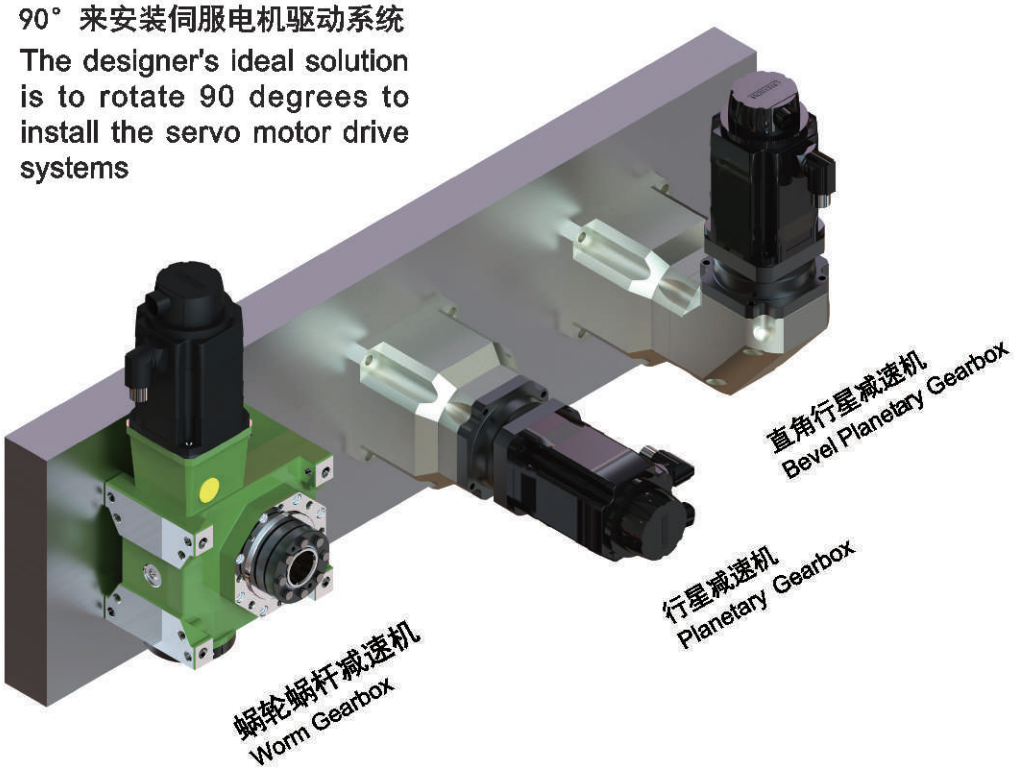

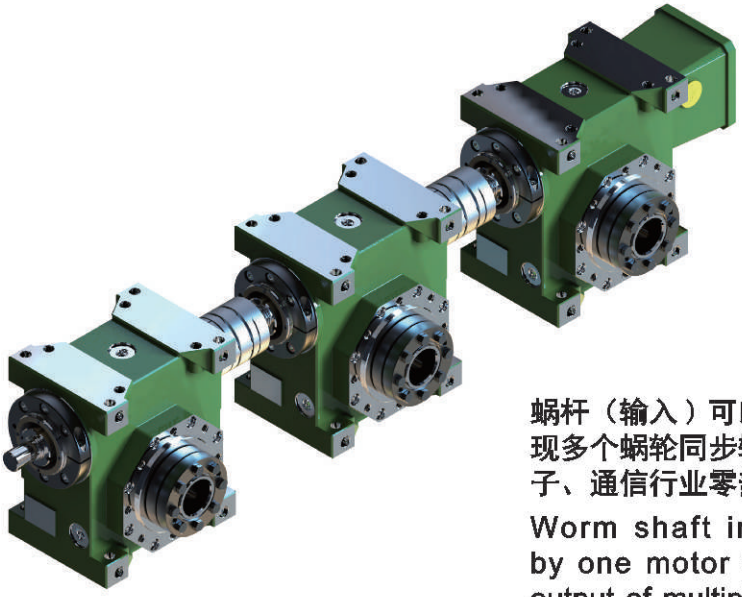

蜗杆（输入）可以串联由一个电机驱动，实现多个蜗轮同步输出。可配套使用于各种电子、通信行业零部件的加工设备

Worm shaft in series can be driven by one motor to achieve synchronous output of multiple worm wheels. It can be applied to parts processing equipment in the electronics industry ,communication industry and ect..

精密蜗轮蜗杆减速机 High precision worm gearbox

优化的接触面

* 先进的加工技术加上精密的组装，确保齿部的正确啮合，减小齿面的接触应力
* 特殊研发的蜗轮铜合金，使齿部具有高强度及很好的耐磨性
* 加上大比率齿面接触，蜗轮不易磨损，能长期保持锁定的侧隙

Optimized contact pattern

* Advanced processing technology and precision assembly to ensure the correct meshing of the tooth and reduce contact stress of the tooth surface
* Special worm wheel bronze alloy makes the teeth have high strength and good wear resistance.
* With a large ratio of tooth surface contact, worm wheel is not easy to wear , It can maintain the locked backlash .

免维护

* 加装高性能全合成润滑油
* 全封闭结构，无需更换润滑油

Maintenance free

* High performance synthetic lubricant
* Closed structure, no need to replace lubricant oil.

能快速安装伺服电机

* 伺服电机专用高刚性、低惯量联轴器
* 可提供各种和伺服电机相配的法兰

Quickly install servo motor

* High stiffness and low inertia coupling for servo motor
* A variety of flanges can be matched with the servo motor

优化的调整结构

* 能快速设定侧隙
* 刚性好，精度高
* 专利结构

Optimized adjustment structure

* Quickly setting backlash
* Higher stiffness and precision
* Patent structure

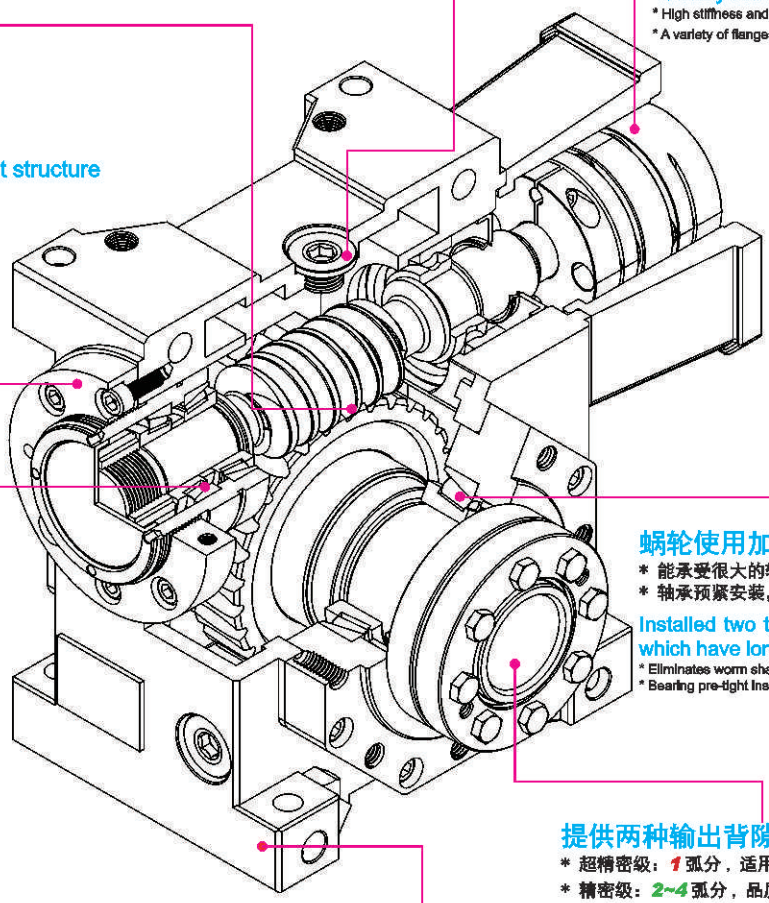

蜗轮使用加大圆锥滚子轴承

* 能承受很大的轴向负荷
* 轴承预紧安装，具有更高的支承刚性

Installed two taper roller bearings with which have longer service lives.

* Eliminates worm shaft alignment problems
* Bearing pre-tight installation, with higher support stiffness

提供两种输出背隙

* 超精密级：*1* 弧分，适用于要求比较高的场合
* 精密级：*2~4* 弧分，品质和价格的折衷方案

Output torsional backlash available in 2 ranges:

* Ultra precision: *1* arc minute for the most demanding applications
* Precision: *2 to 4* arc minutes a good compromise price and quality

蜗杆使用圆锥滚子轴承

* 一端安装两个圆锥滚子轴承，具有更长的使用寿命
* 消除蜗杆热伸长引起的误差
* 轴承预紧安装，具有更高的支承刚性

Worm shaft using Taper roller bearings

* Installed two taper roller bearings with which have longer service lives.
* Eliminates worm shaft alignment problems
* Bearing pre-tight installation, with higher support stiffness

外壳重力浇铸成形

* 高强度铝合金浇铸并经过热处理
* 刚性好，重量轻
* 外形美观耐候性好

Housing with gravity casting

* High strength Aluminum Alloy casting and heat treatment
* Superior rigidity and low weight
* Beautiful shape and Good weather resisting property

特点

蜗轮蜗杆伺服减速机有45-50-55-63-75-90六种规格，采用双导程蜗杆传动。蜗杆的左右齿面使用不同的导程角，引起齿厚的渐变，这样就可以移动蜗杆调整啮合间隙。

特点

- 蜗轮回转背隙可以调整到小于1弧分。
- 减速机使用后可以重新调整间隙。
- 输入用联轴器联结：可靠无背隙。
- 输出用锥形夹紧环联轴器：可靠无背隙。

Features

Servo worm gear units have six types :45 - 50 - 55 - 63 - 75 – 90 ,with dual lead worm drive .Left and right flank of worm shaft using different lead angle ,causing tooth thickness gradual change,So that you can move worm shaft and adjust backlash.

Features

- Worm gear gyration backlash can be adjusted to less than 1 arc.
- Reducer can be re-adjusted the gap after using .
- Input with coupling : reliable without backlash .
- Output using conical clamping ring couplings : reliable without backlash.

使用场合

高精度回转运动

- 减少由负载变动及切削力变化等引起的震动及噪音。
- 减少由正反转引起的冲击及噪音。
- 减少由以上引起的蜗轮加剧磨损。
- 增加蜗轮输出的响应速度。

精密分度装置

- 数控机床、流水线、切割机、输送线等。
- 分度装置、读数机构等要求运动准确的场合。

速度有变化的场合

- 减少由速度变化引起的冲击及噪音。
- 减少由速度变化引起的蜗轮加剧磨损。

Applications

Precision rotary motion

- Reducing the noise and vibration that is caused by the load change and the change of cutting force.
- reducing the noise and impact that is caused by the corotation and reverse.
- By reducing worm abrasion.
- Increasing worm output response speed .

Precision indexing device

- CNC machine, assembly line, cutting machine, transmission lines, etc.
- Indexing device,accurate reading mechanism require accurate movement occasions .

Speed changing situations

- Reducing the noise and the impact that is caused by speed change.
- Reducing the worm abrasion that is caused by speed changes.

间隙调整量

Clearance Adjustment

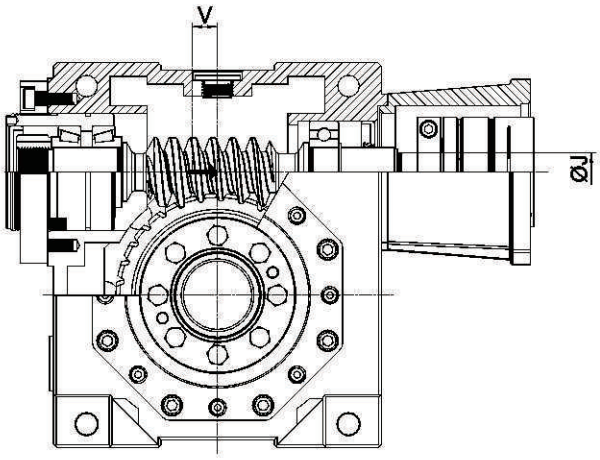

规格 /Size	调整距离 Adjust the distance V [mm]	调整量系数 Adjustment coefficient k [mm^{-1}]	间隙调整量 Clearance Adjustment ΔS_d [mm]	输入轴直径 Input shaft diameter J [mm]
045	8	0.02-0.04	0.16-0.32	15
050	8	0.015-0.03	0.12-0.24	15
055	8	0.015-0.05	0.12-0.4	18
063	10	0.03-0.05	0.3-0.5	20
075	13	0.03-0.06	0.39-0.78	24
090	13	0.03-0.06	0.39-0.78	28

选型

下列的标题包含选择减速机的原理以及正确使用它们的方法。

具体的数值参照相应的章节

Calculate

The following headings contain information on essential elements for selection and correct use of gearbox.
For specific data on the gearbox range,see the relevant chapters.

1.0 输出扭矩

1.1 *额定扭矩*
M_{n2} [Nm]

扭矩作用于连续平稳运转的减速机且在工作系数 $f_s = 1$ 的情况下测出的数值。

1.2 *需求的扭矩*
M_{r2} [Nm]

基于实际所需，数值等于或小于减速机的额定扭矩M_{n2}。

1.3 *计算扭矩*
M_{c2} [Nm]

在选择减速机时有用。
它要考虑实际需求的扭矩 M_{r2} 以及工作系数 f_s ，由以下关系式计算出：

1.0 OUTPUT TORQUE

1.1 *Rated output torque*
M_{n2} [Nm]

The torque that can be transmitted continuously through the output shaft, with the gear unit operated under a service factor $f_s = 1$.

1.2 *Required torque*
M_{r2} [Nm]

The torque demand based on application requirement. It is recommended to be equal to or less than torque M_{n2} the gearbox under study is rated for.

1.3 *Calculated torque*
M_{c2} [Nm]

Computational torque value to be used when selecting the gearbox.
It is calculated considering the required torque M_{r2} and service factor f_s, as per the relationship here after:

$$M_{c2} = M_{r2} \cdot f_s \leq M_{n2}$$

2.0 功率

2.1 *额定输入功率*
P_{n1} [kW]

减速机安全运转时的功率(kW)值，列于参数表中。它是在速度等于n_1且工作系数 $f_s = 1$ 的情况下得出的。

2.2 *额定输出功率*
P_{n2} [kW]

减速机的输出功率值，可以用下面的公式计算。

2.0 POWER

2.1 *Rated input power*
P_{n1} [kW]

The parameter can be found in the gearbox rating charts and represents the KW that can be safely transmitted to the gearbox, based on input speed n1 and service factor $f_s = 1$.

2.2 *Rated output power*
P_{n2} [kW]

This value is the power transmitted at gearbox output. it can be calculated with the following formulas:

$$P_{n2} = P_{n1} \cdot \eta_d$$

$$P_{n2} = \frac{M_{n2} \cdot n_2}{9550}$$

3.0 效率

效率是影响某些应用的主要因素，它的值基本由齿轮副设计的参数决定。

在第9页上的啮合参数表上记录了动态及静态效率值(n_1=1400)。

注意这些值只适用于磨合完成的在工作温度下运转的减速箱

3.0 EFFICIENCY

Efficiency is a parameter which has a major influence on the sizing of certain applications, and basically depends on gear pair designelements.
The mesh data table on page 9 shows dynamic efficiency (n_1=1400)and static efficiency values.
Remember that these values are only achieved after the unit has been run in and is at the working temperature.

3.1 *动态效率* [η_d]

动态效率和输出功率 P_2 以及输入功率 P_1 的关系：

3.1 *Dynamic efficiency* [η_d]

The dynamic efficiency is the relationship of power delivered at output shaft P_2 to power applied at input shaft P_1:

$$\eta_d = \frac{P_2}{P_1}$$

3.2 *静态效率* [η_s]

在减速机刚启动时的效率。虽然对连续传动没有实际的意义，但在选择断续传动的减速机时却十分重要。

3.2 *Static efficiency* [η_s]

Efficiency obtained at start-up of the gearbox. Although this is generally not significant factor for helical gears, it may be instead critical when selecting worm gearmotors operating under intermittent duty.

4.0 工作系数 [f_s]

减速机的工作系数（f_s）主要取决于减速机的运行条件，为了选择最合适的工作环境系数进行正确的组合，必须考虑如下因素：

1. 减速机的负载形式：**A - B - C**
2. 工作时间：**小时 / 天(△)**
3. 开机频率：**次 / 小时(*)**

负载类型：**A** - 均衡负荷，$f_s \leq 0.3$
B - 中等冲击，$f_s \leq 3$
C - 严重冲击，$f_s \leq 10$

$f_s = J_e / J_m$
–J_e (kgm^2)：折算到电机轴上的惯性矩
–J_m (kgm^2)：电机惯性矩
–如果f_s>10时请与技术服务部联系

A –轻质材料螺旋输送机，风扇，装配线，轻质材料皮带输送机，小型搅拌机，提升机，清洁机，灌装机，控制器。

B –卷绕装置，木工机械，货物提升机，平衡器，螺纹机，介质搅拌机，重型材料皮带输送机，绞盘，移动门，刮机，包装机，混凝土搅拌机，起重机，磨割机，卷板机，齿轮泵。

C –重型材料搅拌机，剪切机，压力机，离心机，旋转支撑，重型材料绞盘和提升机，磨床，石材，升降机，钻孔机，锤式粉碎机，凸轮压力机，折叠机，运输带，翻斗车，振动器，撕碎机。

4.0 SERVICE FACTOR [f_s]

The service factor (f_s) depends on the operating conditions the gearbox is subjected to the parameters that need to be taken into consideration to select the most adequate servies factor correctly comprise:

1. type of load of the operated machine : **A - B - C**
2. length of daily operating time: **hours/day(△)**
3. start-up frequency: **starts/hour (*)**

TYPE OF LOAD: **A** - uniform, $f_s \leq 0.3$
B - moderate shocks, $f_s \leq 3$
C - heavy shocks, $f_s \leq 10$

$f_s = J_e / J_m$
–J_e(kgm^2) moment of the external Inertia reduced at the drive shaft
–J_m(kgm^2) moment of inertia of motor
–If f_s>10 please contact our Technical Service

A -Screw feeders for light materials, fans, assembly lines, conveyor belts for light materials, small mixers, lifts, cleaning machines, fillers, control machines.

B -Winding devices, woodworking machine feeders, goods lifts, balancers,threading machines, medium mixers, conveyor belts for heavy materials,winches, sliding doors, fertilizer scrapers, packing machines, concrete mixers, crane mechanisms, milling cutters, folding machines, gear pumps.

C -Mixers for heavy materials, shears, presses, centrifuges, rotating supports, winches and lifts for heavy materials, grinding lathes, stone mills, bucket elevators, drilling machines, hammer mills, cam presses, folding machines, turntables, tumbling barrels, vibrators, shredders.

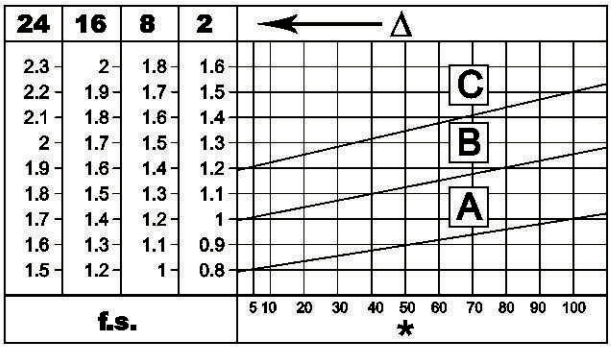

精密蜗轮蜗杆减速机

性能参数 Specification

输入转速 n1 Input speed(n1)		3000转 / 3000 rpm		2000转 / 2000 rpm		1000转 / 1000 rpm	
规格 Size	速比i Ratio(i)	效率 η Efficiency(η)	额定输出扭矩 M1(牛米) Rated ouput torque M1(Nm)	效率 η Efficiency(η)	额定输出扭矩 M1(牛米) Rated ouput torque M1(Nm)	效率 η Efficiency(η)	额定输出扭矩 M1(牛米) Rated ouput torque M1(Nm)
45	15	0.85	100	0.8	120	0.74	150
	20	0.82	100	0.77	120	0.71	150
	25	0.79	100	0.74	120	0.68	150
	30	0.74	100	0.69	120	0.63	150
	40	0.69	100	0.64	120	0.58	150
	50	0.66	100	0.61	120	0.55	150
	60	0.62	100	0.57	120	0.51	150
50	15	0.85	120	0.8	160	0.74	200
	20	0.82	120	0.77	160	0.71	200
	25	0.79	120	0.74	160	0.68	200
	30	0.75	120	0.7	160	0.64	200
	40	0.7	120	0.65	160	0.59	200
	50	0.66	120	0.61	160	0.55	200
	60	0.62	120	0.57	160	0.51	200
55	15	0.86	150	0.81	200	0.75	280
	20	0.83	150	0.78	200	0.72	280
	25	0.8	150	0.75	200	0.69	280
	30	0.76	150	0.71	200	0.65	280
	40	0.71	150	0.66	200	0.6	280
	50	0.67	150	0.62	200	0.56	280
	60	0.63	150	0.58	200	0.52	280
	80	0.58	140	0.53	180	0.47	250
63	15	0.87	280	0.82	380	0.76	420
	20	0.85	280	0.8	380	0.74	420
	25	0.82	280	0.77	380	0.71	420
	30	0.78	280	0.73	380	0.67	420
	40	0.74	280	0.69	380	0.63	420
	50	0.7	280	0.65	380	0.59	420
	60	0.67	280	0.62	380	0.56	420
75	15	0.89	360	0.84	500	0.78	600
	20	0.86	360	0.81	500	0.75	600
	25	0.84	360	0.79	500	0.73	600
	30	0.8	360	0.75	500	0.69	600
	40	0.76	360	0.71	500	0.65	600
	50	0.73	360	0.68	500	0.62	600
	60	0.69	360	0.64	500	0.58	600
	80	0.64	330	0.59	450	0.53	600
90	15	0.9	700	0.85	800	0.79	1100
	20	0.88	700	0.83	800	0.77	1100
	25	0.86	700	0.81	800	0.75	1100
	30	0.82	700	0.77	800	0.71	1100
	40	0.79	700	0.74	800	0.68	1100
	50	0.76	700	0.71	800	0.65	1100
	60	0.73	700	0.68	800	0.62	1100
	80	0.67	650	0.62	750	0.56	950
	100	0.63	650	0.58	750	0.52	950

P	[kW]	功率	Power	n_1	min^{-1}	输入转速	Angular Input speed
P_1	[kW]	输入功率	Transmitted power at input shaft	n_2	min^{-1}	输出转速	Angular output speed
P_2	[kW]	输出功率	Transmitted power at output shaft	i	-	减速比	Ratio
P_{n1}	[kW]	额定输入功率	Rated input power	η_d	-	动态效率	Dynamic efficiency
M_2	Nm	输出扭矩	Transmitted torque at output shaft	f_s	-	工作系数	Service factor
M_{c2}	Nm	计算的输出扭矩	Calculated torque at output shaft	F_{r1}	N	输入轴径向负荷	Input shaft radial load
M_{n2}	Nm	额定输出扭矩	Rated torque at output shaft	F_{r2}	N	输出轴径向负荷	Output shaft radial load
M_{r2}	Nm	需求的扭矩	Required torque at output shaft	F_{a2}	N	输出轴轴向负荷	Output shaft axial load
J_m	kgm^2	电机惯性矩	Moment of inertia of motor				
J_e	kgm^2	折算到电机轴上的惯性矩	Moment of the external inertia reduced at the drive shaft				

输出方位 output Position

锁紧盘孔输出
Hollow shaft
for shrink disc

C - H1

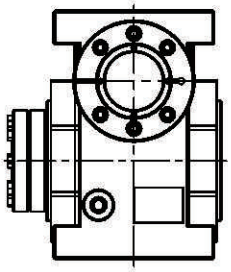

C - H2

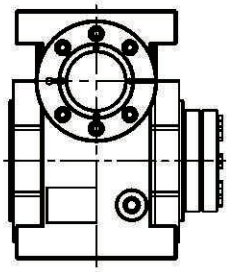

单出轴
Single output shaft

P - H1

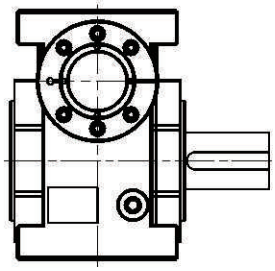

P - H2

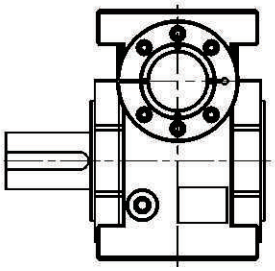

以下两种输出方式不需要区分H1和H2/H1&H2 is same for below types:

双出轴 Dual output shaft

2P-H1/2P-H2

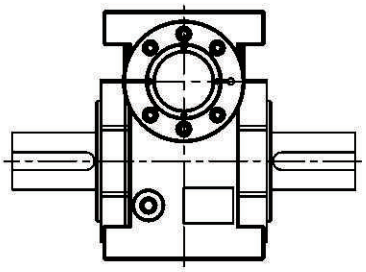

键槽孔输出Hollow shaft with keyway

CR-H1/CR-H2

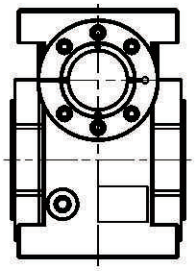

安装方位 Mounting position

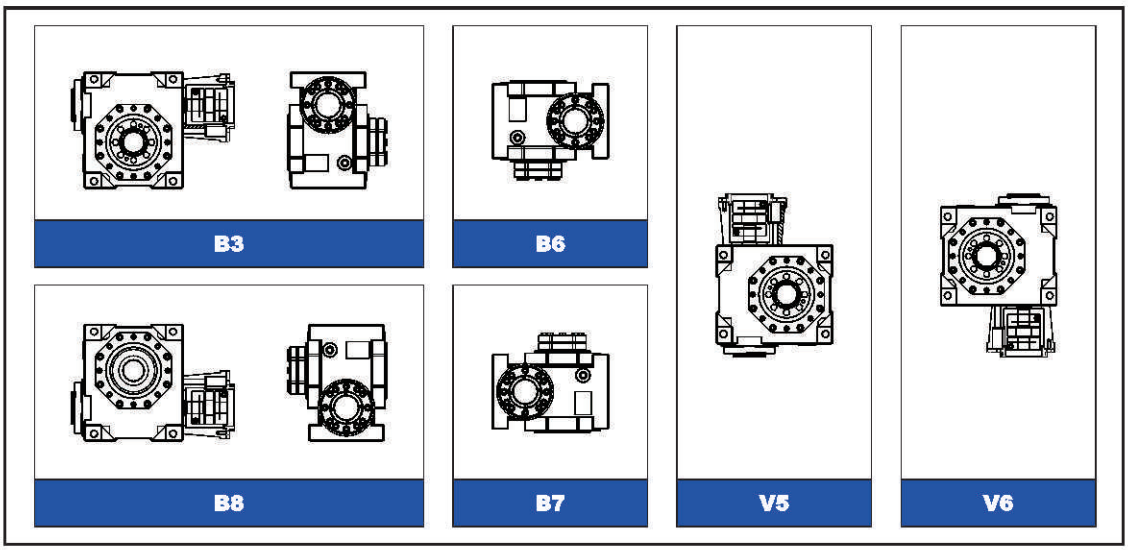

尺寸图 Dimensions　空心轴带锁紧盘输出/Hollow shaft with shrink disk

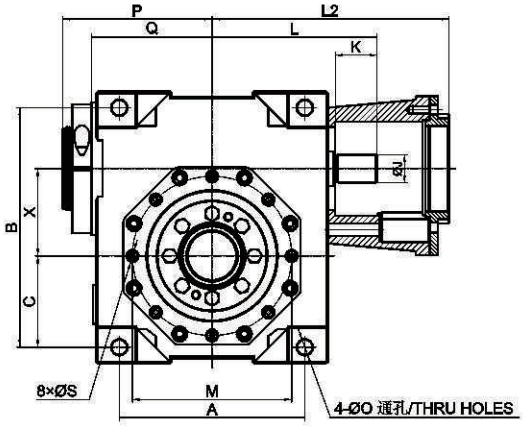

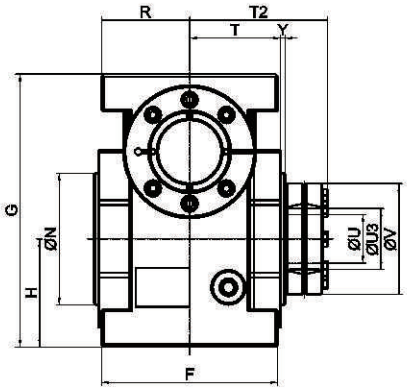

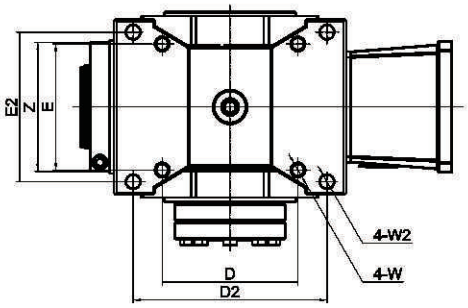

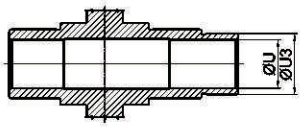

带锁紧盘孔输出/Hollw Output Bore With Shrink disc

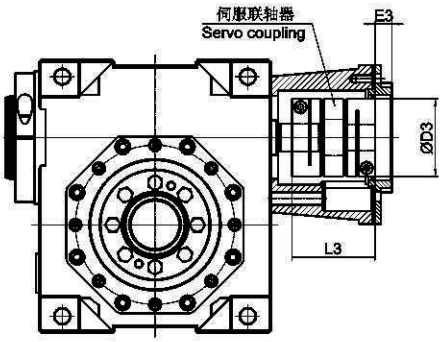

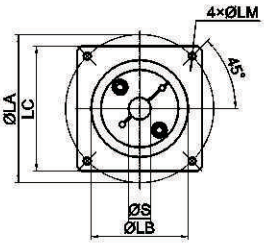

伺服电机示意图/Servo motor

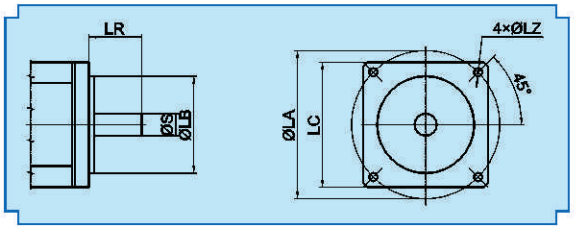

规格 /Size	045	050	055	063	075	090
A	108	108	120	134	172	186
B	135	138	155	173	208	234
C	53	53	61	66	82	91
D	81	81	90	98	136	141
D2	114	114	125	140	172	204
D3	44	44	56	56	68	68
E	68	68	78	91	110	130
E2	84	84	96	108	125	140
E3	5	5	6.5	6.5	6.5	6.5
F	100	100	112	127	148	170
G	153	156	175	197	232	264
H	62	62	71	78	94	106
J(h6)	15	15	18	20	24	28
K	24	24	28	30	35	35
L	98.5	98.5	111	122	147	157
L2	103+LR	103+LR	116+LR	127+LR	152+LR	162+LR
L3	48	48	59.8	59.8	73.3	73.3
M	85	85	100	115	130	165
N(h7)	70	70	80	95	110	130
O	9	9	9	11	11	13
P(max)	91	91	100	108	129	139.5
Q	70.5	70.5	78	87	107	117.5
R	50	50	56	63.5	74	85
S	M8	M8	M8	M8	M10	M12
T	52	52	58	65.5	76	87
T2	78	78	87	96.5	110	124
U(H7)	25	25	30	35	40	50
U3	30	30	36	44	50	68
V	60	60	72	80	90	115
W	M8	M8	M8	M10	M10	M12
W2	9	9	9	10	12	14
X	45	50	55	63	75	90
Y	3	3	3.5	3.5	4	4
Z	86	86	86	93	108	108
LA/LB/LC/LR/LM/S	按伺服电机 /By servo motor					

尺寸图 Dimensions　空心轴键槽输出/Hollow shaft with keyway

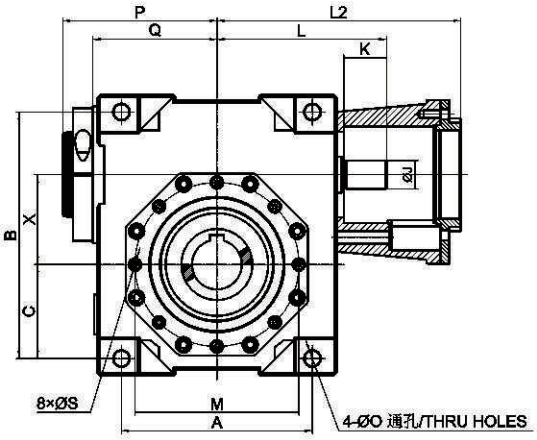

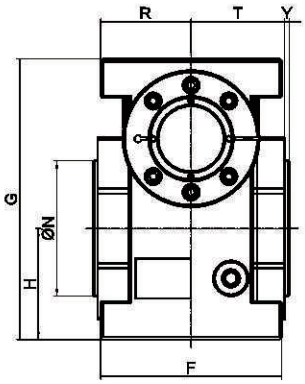

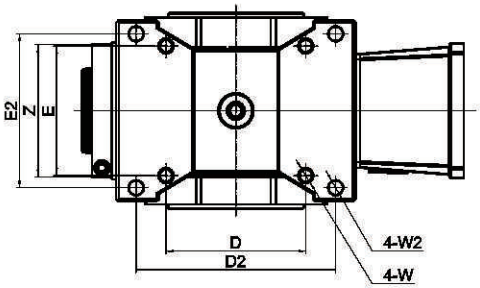

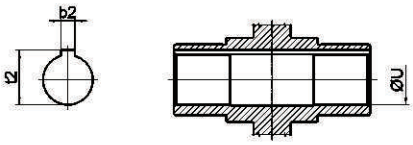

带键孔输出/Hollw Output Bore With Keyway

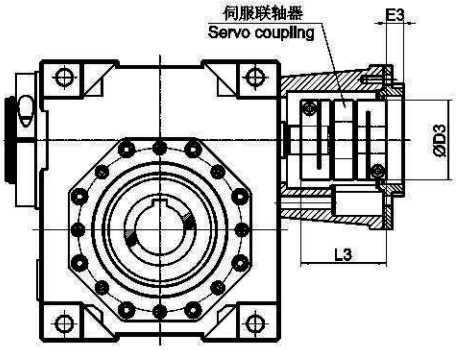

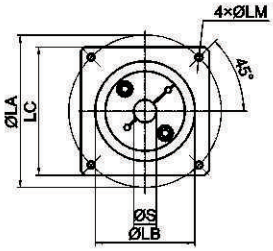

伺服电机示意图/Servo motor

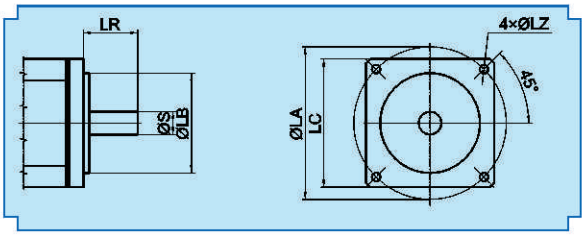

规格 /Size	045	050	055	063	075	090
A	108	108	120	134	172	186
B	135	138	155	173	208	234
C	53	53	61	66	82	91
D	81	81	90	98	136	141
D2	114	114	125	140	172	204
D3	44	44	56	56	68	68
E	68	68	78	91	110	130
E2	84	84	96	108	125	140
E3	5	5	6.5	6.5	6.5	6.5
F	100	100	112	127	148	170
G	153	156	175	197	232	264
H	62	62	71	78	94	106
J(h6)	15	15	18	20	24	28
K	24	24	28	30	35	35
L	98.5	98.5	111	122	147	157
L2	103+LR	103+LR	116+LR	127+LR	152+LR	162+LR
L3	48	48	59.8	59.8	73.3	73.3
M	85	85	100	115	130	165
N(h7)	70	70	80	95	110	130
O	9	9	9	11	11	13
P	91	91	100	108	129	139.5
Q	70.5	70.5	78	87	107	117.5
R	50	50	56	63.5	74	85
S	M8	M8	M8	M8	M10	M12
T	52	52	58	65.5	76	87
U(H7)	25	25	30	35	40	50
V	60	60	72	80	90	115
W	M8	M8	M8	M10	M10	M12
W2	9	9	9	10	12	14
X	45	50	55	63	75	90
Y	3	3	3.5	3.5	4	4
Z	86	86	86	93	108	108
t2	27.8	27.8	33.3	38.3	43.3	53.8
b2	6	6	8	10	12	14
LA/LB/LC/LR/LM/S	按伺服电机 /By servo motor					

尺寸图 Dimensions 实心轴输出(单轴/双轴)Solid shaft(single shaft/double shaft)

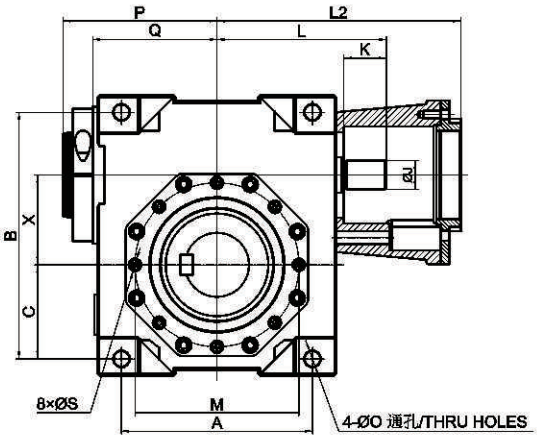

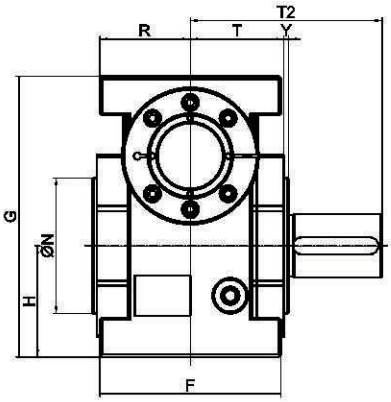

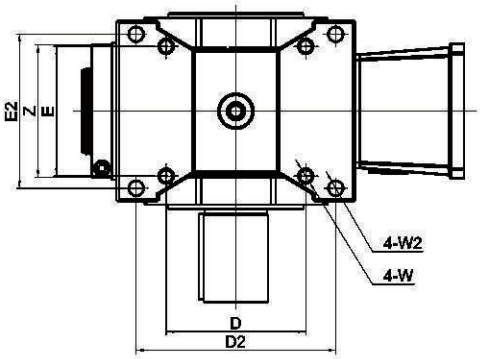

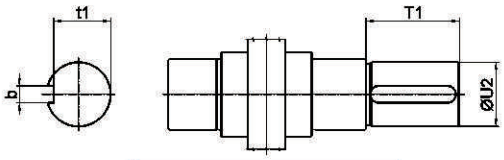

单输出轴/SIngle output shaft

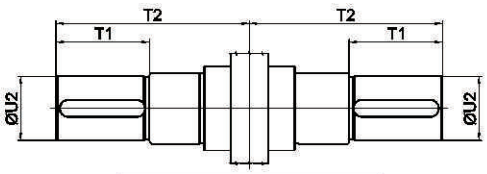

双输出轴/Double output shaft

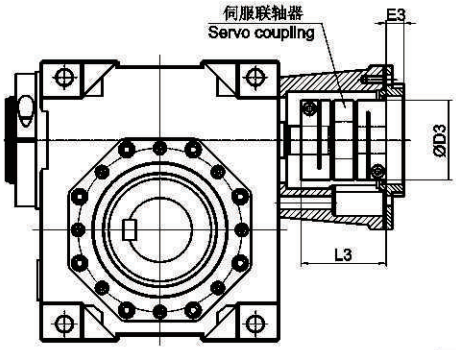

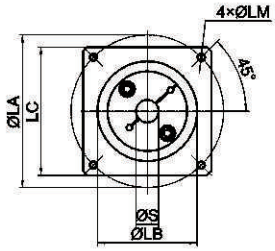

伺服电机示意图/Servo motor

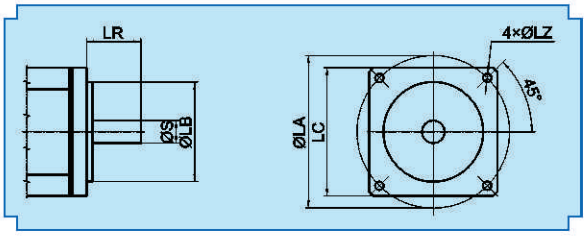

规格 /Size	045	050	055	063	075	090
A	108	108	120	134	172	186
B	135	138	155	173	208	234
C	53	53	61	66	82	91
D	81	81	90	98	136	141
D2	114	114	125	140	172	204
D3	44	44	56	56	68	68
E	68	68	78	91	110	130
E2	84	84	96	108	125	140
E3	5	5	6.5	6.5	6.5	6.5
F	100	100	112	127	148	170
G	153	156	175	197	232	264
H	62	62	71	78	94	106
J(h6)	15	15	18	20	24	28
K	24	24	28	30	35	35
L	98.5	98.5	111	122	147	157
L2	103+LR	103+LR	116+LR	127+LR	152+LR	162+LR
L3	48	48	59.8	59.8	73.3	73.3
M	85	85	100	115	130	165
N(h7)	70	70	80	95	110	130
O	9	9	9	11	11	13
P	91	91	100	108	129	139.5
Q	70.5	70.5	78	87	107	117.5
R	50	50	56	63.5	74	85
S	M8	M8	M8	M8	M10	M12
T	52	52	58	65.5	76	87
T1	55	55	60	70	75	100
T2	110	110	121.5	139	155	191
U2(h6)	35	35	40	45	50	65
V	60	60	72	80	90	115
W	M8	M8	M8	M10	M10	M12
W2	9	9	9	10	12	14
X	45	50	55	63	75	90
Y	3	3	3.5	3.5	4	4
Z	86	86	86	93	108	108
t1	30	30	35	39.5	44.5	58
b	10	10	12	14	14	16
LA/LB/LC/LR/LM/S	按伺服电机 /By servo motor					

如何订购 / How to order

类型 Type	减速比 Ratio	输出 Output	输出方位 Output PO.	背隙 Backlash	安装方位 Mounting position	颜色 Color	电机 Electric motor
KRV 075	30	C	H1	P0	B3	B	1FK7042...

电机型号
Motor type

颜色/Color
B = 银灰色/Silver gray O=橄榄绿/Olive

安装方位/Mounting position
B3, B6, B7, B8, V5,V6 见第8页/See page 8

背隙/Backlash
P0 1 弧分/ arcminute (超精密级/Ultra precision)
P1 2~4 弧分/ arcminutes (精密级/Precision)

输出方位/Output position
H1,H2 见第8页/See page 8

输出轴/Output shaft
C (锁紧盘孔输出/Hollow shaft with shrink disk)
CR(键槽孔输出/Hollow shaft with keyway)
P (单出轴/Single output shaft)
2P (双出轴/Dual output shaft)

减速比/Ratio
15,20,25,30,40,50,60,80,100

减速机尺寸/Gearbox size
45,50,55,63,75,90

减速机类型
Reducer type

上海承禹机电设备有限公司
ShangHai ChengYu Electric Equipment Co.,Ltd
地址:上海市闵行经济技术开发区元江路5500号
服务热线:021-54396571；13671904246
传真:021-33321170 QQ:641341568
邮箱:shcy68@163.com
网址:www.cygearbox.com